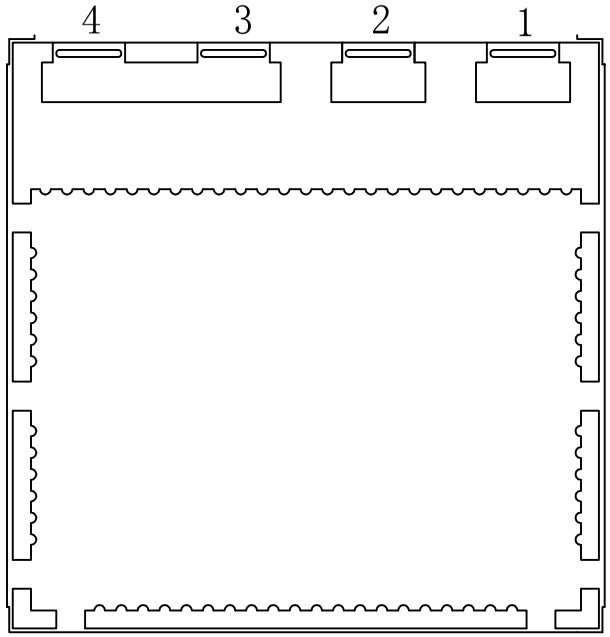

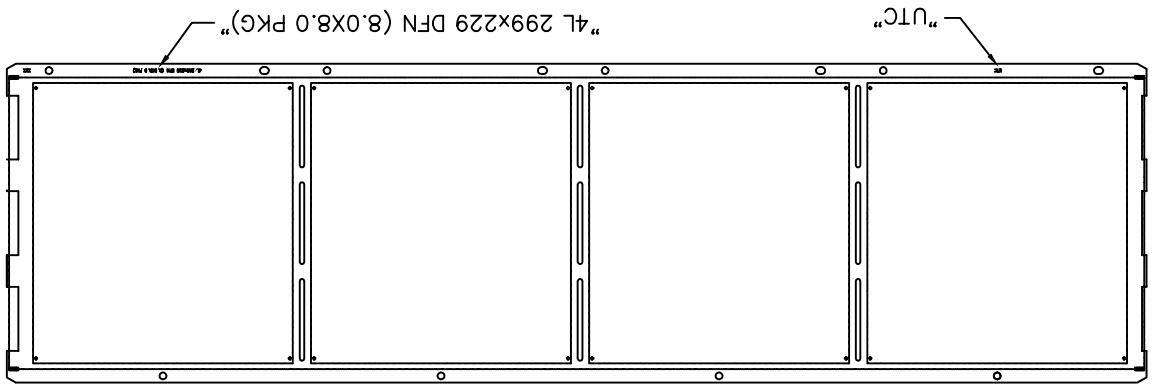

FSMC	L/F	DFN8080-4 (299*229)0.2				
	Stage	7.60mm*5.82mm				